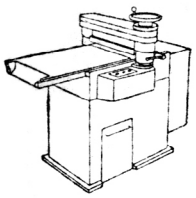

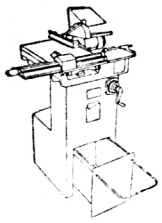

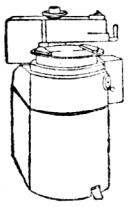

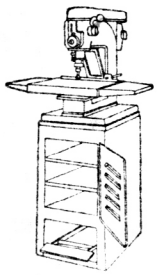

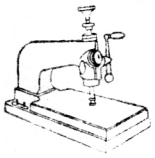

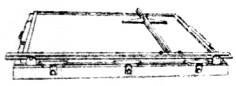

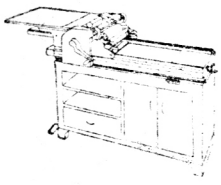

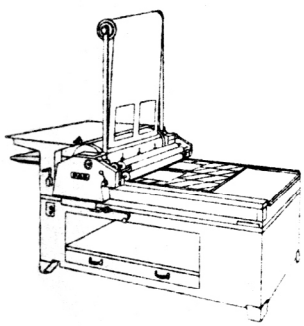

FAG INSTRUCTION

PRESS

FAG - SWISSPROOF S - 40

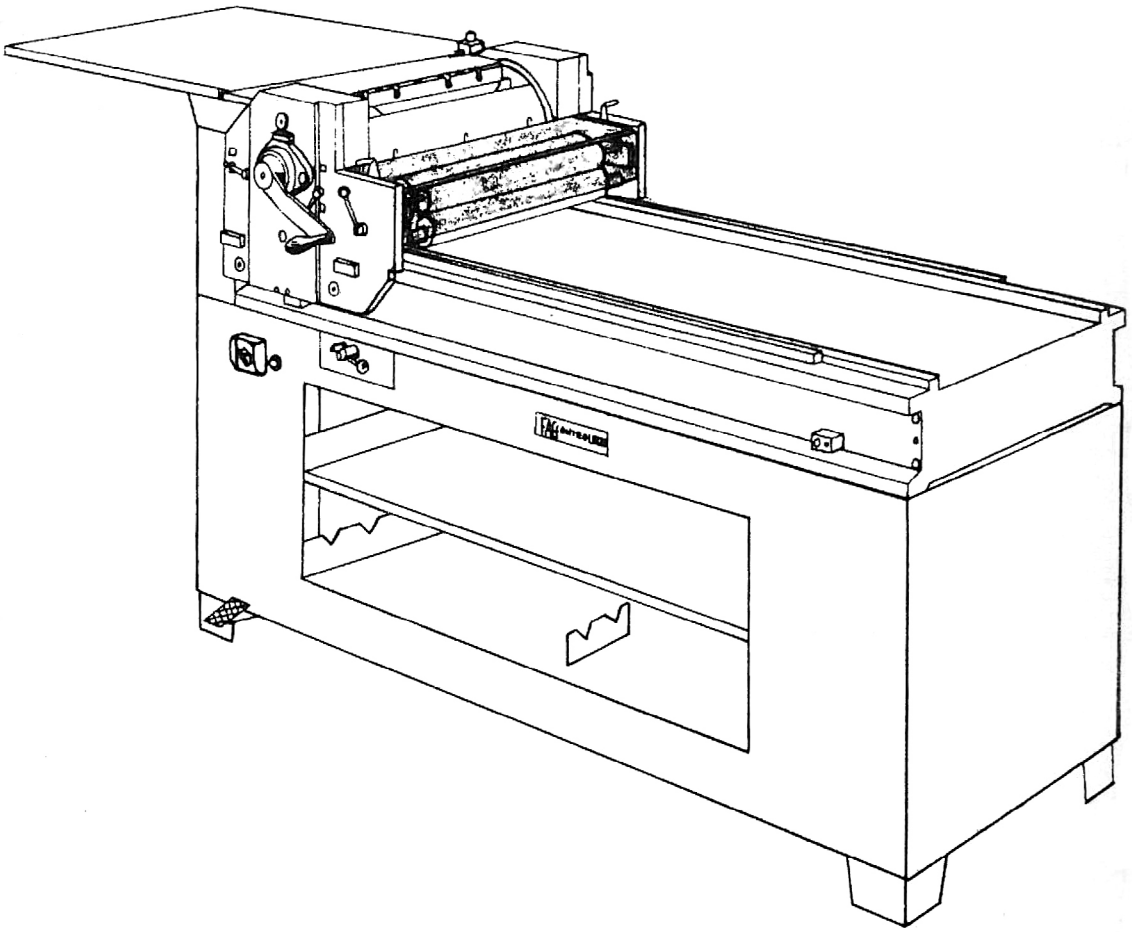

Machine N° .....

FAG FOR M-TEST

Digitized & provided by www.proofpress.ch – dk, 2021
Courtesy of FAG Graphic Systems SA, Lausanne, Switzerland, www.fag.ch

I N D E X

PREPARATION FOR INSTALLATION OF MACHINE

I. Packing of Machine
II. Check on Arrival
III. Moving of Press to Site

TAKING THE MACHINE INTO OPERATION

IV. Erection
V. Levelling of Machine
VI. Electrical Installation
VII. Explanation of Machine Controls
VIII. Cylinder Packing
IX. Inking System
X. Paper Lays
XI. Maintenance

INDEX OF MOST IMPORTANT MACHINE PARTS

INDEX OF ILLUSTRATIONS

Illustrations 1 Transport of Machine With fixed bed
2 Transport of Machine with adjustable bed
3 Measurements of Machine
4 Measurements of Cylinder Packing sheets
5 Total view of Press, right and left side
6 Fastening of Cylinder Packing
7 Features of Inking System, Adjustment of Forme Inking Rollers

9 Forme Inking Rollers
10 Electrical Wiring Diagrams

Page 11: List of accessories and tools delivered with the Press as standard equipment.

Digitized & provided by www.proofpress.ch – dk, 2021
Courtesy of FAG Graphic Systems SA, Lausanne, Switzerland, www.fag.ch

PREPARATION FOR INSTALLATION OF MACHINE

I. PACKING OF MACHINE

According to the country of destination the FAG CONTROL 525 is delivered in a Overland Transport Crate or in a Seaworthy Export Crate.

II. CHECK ON ARRIVAL

a) Before uncrating the machine check if any damage has occured to the crate itself as such could be an indication of damage to the machine.

b) Remove the crate.

c) Check the general condition of the machine and make sure that no damage has occured during transport. In case of damage inform the transport company immediately (railways, road or forwarding agent). A detailed list of damage has to be made by a responsible body and at the same time the FAG agent has to be informed.

d) Please check all items of equipment and accessories against Delivery Note or Invoice. In case of any discrepancy please inform the Agent from whom the Press has been bought, immediately.

III. MOVING OF PRESS TO SITE

Lifting of Press with a hoist

a) For machines with fixed bed (ill. 1)

b) For machines with adjustable bed (ill. 2)

Insert 2 steel bars "B" of 1-1/4 " diameter into the openings "A", according to illustrations. If possible use natural fibre ropes in contact with machine. From previous experience we have found the use of steel cables or chains might cause certain damage to the machine, especially to the paint work any they should, therefore, not be used.

IV. ERECTION

a) The site has to be prepared and levelled making sure that the space allocated is as given on Ill. 3.

b) The elecrical supply can be prepared in advance so the machine - once in position - can be hooked-up immediately.

c) The Press must be lifted 1/4 " (5 mm) from the floor. For that purpose there are height adjustment screws unter each foot; place the washers underneath.

Digitized & provided by www.proofpress.ch – dk, 2021
Courtesy of FAG Graphic Systems SA, Lausanne, Switzerland, www.fag.ch

d) Remove wooden distance pieces holding the impression cylinder.

e) All visible outside-parts have to be thouroughly cleaned.

f) Lubrication of the mechanical parts according to paragraph XI.

V. LEVELLING OF MACHINE

Put machine into horizontal position by means of the adjusting screws (1), to be found underneath each foot of the Press. Use a spirit level to check the position. Make sure that the level is obtained in all directions by placing the spirit level along and across the type bed. Lock the adjusting screws by tightening the lock nuts. A further check must be made after the machine has been in use for some time.

VI. ELECTRICAL INSTALLATION

a) The electrical connection has to be carried out by a qualified electrician.

b) Check the power of supply and compare with that shown on the tag of the motor. The connecting scheme is situated near the connecting terminal to the network.

c) The complete electrical wiring and switches are designed for 500 volts.

d) In order to get access to the connecting box, remove back sheet metal (2) under feedboard (3).

e) Before switching on the power supply to the Press check that the main switch (4) is off.

For machine with adjustable speed:
Adjust potentiometer (6) at min. speed.

f) Switch on main switch (4); control lamp must light up (7).

g) Check the turning of the ink drum (8) which has to turn anticlockwise, looking from the operators side.

h) The wiring diagram (ill.10) gives all necessary indication of the electrical system.

VII. EXPLANATION OF MACHINE CONTROLS (ill. 5)

1) By turning on main switch (4) control lamp (7) lights up and ink drum (8) is set in motion.

2) As soon as cylinder is on feedboard, grippers open by pressing down the pedal (11) and printing sheet can be laid on.

3) If wedge (12) is placed, according to pos. 1, on the type bed, grippers will open at the end of the machine bed and printing sheet can be pulled out by hand. In order to print smaller sizes place wedge as indicated on pos. 2 (ill. 5).

Important: In this position the grippers will only open when cylinder is "ON" impression.

4) On the left-hand side of the wall you will find the knob (13) to operate "ON" and "OFF" impression. Putting this knob up cylinder carriage is "ON" impression. Pulling it downwards cylinder carriage is "OFF" impression.

Digitized & provided by www.proofpress.ch – dk, 2021
Courtesy of FAG Graphic Systems SA, Lausanne, Switzerland, www.fag.ch

5) The drawer (14) at the bottom of the machine is equipped with racks to hold additional forme inking rollers and has a compartment for tools or ink.

6) The lever (15) controls position of the forme inking rollers (16) and at the same time brings in the reciprocating movement of the rider unit.

7) The sheet guides (17) prevent the printing sheet from touching the inking rollers. They are absolutely necessary to print hard paper. They can easily be pushed along their guide bar and can be put on the most favorable point, according to use.

8) For machines with automatic ink system washing up device the drawer (18) is provided with a handle (19), directions for use page 7.

9) Paper storage shelf (20) can be loosened from the cylinder carriage. It is sufficient to lift the far end and to pull.

10) The hand wheel of machine with adjustable bed serves to adjust the hight of the type bed with regard to the bearing ways. In turning it clockwise the type bed is lifted, in the opposite way the bed is lowered. To block the hand wheel in the desired position, turn screw (22). The printing hight can be read from the dial indicator (23).
Remember that the two extreme hights are 0.807" and 1.081" (20,5/27,5 mm)

VIII. CYLINDER PACKING

Thickness of Packing

The thickness is theoretically .049" (1,25mm). The exact thickness is indicated on the label (24). It will probably have to be adjusted according to the paper substance or cardboard to the printed.

Paper Qualitiy of Packing

Everybody will appreciate that only close tolerance paper has to be used for making a packing. The top draw sheet has to be smooth and be of good quality tympan with a thickness of about .004" - .006". The use of a plastic or cellophane draw sheet should be avoided as static electricity will be created, which tends to hold the printed sheet to the cylinder. Below we give one example of a packing composition which has been quite successful in use :

VISCO-Packing as delivered with the machine	: 1	sheet VISCO C, Tympan	0,15 mm
	1	sheet VISCO W, Plastic	0,25 mm
	1	sheet VISCO MKP	0,30 mm
	3	sheets C Tympan 3 x 0,15 =	0,45 mm
			1,15 mm
	+ 1	sheet for impression	0,10 mm
		total	1,25 mm
		=	.050 "

The various sheets mentioned above can be obtained from FAG SUPPLIES Division.

It is most important that the cylinder packing is as accurate as possible to achieve a satisfactory print and to keep registered at all times.

Digitized & provided by www.proofpress.ch – dk, 2021
Courtesy of FAG Graphic Systems SA, Lausanne, Switzerland, www.fag.ch

Cylinder over-packed	= half-tone blocks too low	= This creates an elongated half-tone dot in the direction of the printing stroke.
Cylinder under-packed	= half-tone blocks too high	= This creates an elongated half-tone dot in the direction of the feedboard.

To check the accuracy of the cylinder packing we recommend the use of a micrometer gauge, such as the FAG Plate Gauge PG.

If the cylinder packing is correct and the impression itself shows to be too weak, the fault lies in the printing forme and should be rectified in the forme and not by adding sheets to the cylinder packing, as this will create a faulty circumference of the cylinder, resulting in bad register.

Measurements of Packing: (ill. 4)

Setting of Packing on Cylinder: (ill. 6)

1) Loosen the locking screws (25) of the gripper holding bar.

2) Move side lay (26) away to edge of feedboard.

3) Folding of draw sheet:

   a) Lay draw sheet on to bed of machine, side "a" in front against one of the bed bearers.

   b) Make sure that draw sheet protudes about 1/2" (10 mm) over the front edge of the bed.

   c) Fold draw sheet in this position and fold the overlap over the edge of the bed. This will guarantee that the fold is at right angles to the side of the sheet.

   d) Lift sheet off and fold back completely, producing a sharp fold.

4) The fold (29) must be put between the cylinder (27) and the gripper holding bar. The recess (b) is to find on the side of the ratchet wheel, that means on the left side of the machine. Before tightening gripper bars against the cylinder check that front edge of draw sheet is properly inserted over the whole length.

5) The locking screws (25) should be secured - but not fully locked - and it is best to tighten first the centre screws and afterwards the outer-ones. In this way a bad locking up of the draw sheet can be eliminated.

6) Advance the impression cylinder by about 4" (10 cm).

7) Position the loose sheets of the cylinder packing under draw sheets, making sure that all sheets are equal and laid straight between the bearers and are pushed completely forward into the fold of the draw sheet.

8) Advance cylinder now one complete revolution, making sure in this operation that the cylinder packing is well pressed against cylinder and

Digitized & provided by www.proofpress.ch – dk, 2021
Courtesy of FAG Graphic Systems SA, Lausanne, Switzerland, www.fag.ch

moves smoothly around its surface. It is advisable to have a second person to help in this operation to ensure that tray rests well in place.

9) Bring end of draw sheet under square tension bar. Pull sheet tight and mark first fold over edge of square bar (ill. 6 A). Press sheet against bar, turning bar mark and making the following fold until the end of the sheet. Then tighten sheet to bar following the refolded marks and wrapping the tail around the tension bar. Check that the tension on the draw sheet (ill. 6 B) is equal on both sides and secure the tension bar (ill. 6 C) by inserting into ratchet wheel.

10) Tighten now the locking screws (25) of gripper bars securely.

11) Test thickness of packing by placing a sheet of paper of substance to be printed on upon the bed of the machine. Put cylinder on impression and move to centre of bed. Take setting gauge and pass under cylinder. The gauge should just pass through without forcing it (31).

IX. INKING SYSTEM

The inking system comprises:

a) 2 inking rollers
b) Steel rider distribution system

Inking Rollers

The standard forme inking rollers are delivered with a synthetic rubber or a plastic covering. 2 inking rollers are mounted on the machine. The back inking roller is the one next to the cylinder; the second is named front inking roller The back-one only is equipped with a gear wheel, Measurements of the rollers, see illustration 9.

We point out that the front roller as well as the support are marked with red marks. If you pay attention to those marks you will be able to exchange the inking rollers, i.e. for colour printing, without re-setting the rollers as set first.

Ink distribution system

This distribution consists of 3 steel cylinders:

1 reciprocating rider and 2 steel riders
2 supports maintaining the ends of the cylinder spindel.

Setting of the ink distribution system:

1) Introduce the 2 inking rollers in their support, without adjusting the height. Remember above-mentioned red marks.

2) Introduction of the ink distribution system. This can easily be done by holding it on the two handles provided and by laying it onto the inking rollers. Make sure that the 2 stop pins (32) are placed correctly. The hook (32) is on the right side of the machine.

3) Put lever (15) in perpendicular "OFF" position.

4) Push cylinder carriage to feedboard.

Digitized & provided by www.proofpress.ch – dk, 2021
Courtesy of FAG Graphic Systems SA, Lausanne, Switzerland, www.fag.ch

5) Ink is distributed evenly over full length on the reciprocating steel rider with a palette knife.

6) The ink distribution motor moves by switching on the main switch (4). When lowering the ink system it starts moving. Allow the ink film to spread evenly over all rollers.

7) Put impression cylinder "ON" impression and advance cylinder carriage half-way down the machine bed.

8) Adjust height of the 2 inking rollers. For this adjustment take a hexagon key (34) which is delivered with the machine. The inking rollers will lift or lower by fasten or loosen the screws (35). Check height of forme inking rollers with the roller setting gauge (31). The setting gauge should show an ink marking of about 3/32" (2 mm max.).

Exchange of Inking Rollers:

In order to exchange the inking rollers or to have access to them, it is not necessary to take out completely the ink distribution system. This can be turned to the front by pulling it in horizontal position on the handles. As soon as the hook (33) is introduced in the stop pin on the wall, the ink system stays in equilibrium and the rollers can easily be taken out or exchanged.

Ink system washing up device

a) For Press without washing up device:

Cylinder carriage must be at the end of the machine bed. The ink system can be cleaned easily if it is adjusted as marked on ill. 7. Wash up the front roller (16). Exchange the two rollers; the back-one in front, which can now be turned and washed. Don't forget, to put them back in their original position. The ink drum (8) is to be cleaned by making it turn with its motor.

b) For Press equipped with a washing up device:

1) Cylinder carriage on feedboard.

2) Lower ink system by means of the control lever (15).

3) Turn main switch; ink drum (8) moves.

4) Push down lever and introduce locking link (37). The link keeps lever in its position. A play between lever and link can be suppressed by adjusting the screw on the link.

5) Apply drop by drop a roller washing solvent from one end to the other on the vibrator roller (38).

6) The last ink marks on drum are to be wiped off with a clean rag.

7) Unhook locking link and place lever (19) again in horizontal position.

Cleaning of drawer:

8) Pull out drawer. It can only be pulled out with lever being in horizontal position.

Digitized & provided by www.proofpress.ch – dk, 2021
Courtesy of FAG Graphic Systems SA, Lausanne, Switzerland, www.fag.ch

9) It is of utmost importance that care is taken not to damage the nylon-ductor blade, it might loose its efficiency.

X. PAPER LAYS

a) Side Lays

The side lay (26) can be mounted on the slot of the feedboard (39). For a quick and approximate positioning of the lay, the nut on top of the lay is loosened which allows a quick movement of the complete lay within the slot. For minute setting the micrometer setting screw on the back is operated. The calibrations on this screw are a guide only and are to be used as a memory help to the operator.

b) Front Lays

The gripper holding bar (26) is equipped with front lays and each of them has a micrometer setting screw. In deplacing the nut (40) at about 1/4, i.e. 4 graduations, the lay will deplace itself for .01" (0,25 mm). Only the two front lays should be used which are the most distant on the printing sheet. This will give a positive register using the correct three point lay principle.

Important:

For security reasons the feedboard prolongation (39) can be moved quite freely upwards. If, for instance, the printer leaves his fingers against the edge of this prolongation, it moves upwards by the return movement of the cylinder and an accident has been avoided.

XI. MAINTENANCE

As with any other precision built machine the service one gets depends largely upon the care the machine is given. It is, therefore, essential that the machine is cleaned regularly and lubricated at strict intervals as this will be the best guarantee against unnecessary wear.
It is advisable only to use best-known brands of first quality lubricants. For all moving parts, bearing axles, chains etc., use oil SAE 10. For the motor use SAE 90.

Important:

Do not apply any oil or grease to the cylinder bearing ways, or the bearing ways on the bed frame. However, clean them every day with a clean rag soaked in petrol.

Digitized & provided by www.proofpress.ch – dk, 2021
Courtesy of FAG Graphic Systems SA, Lausanne, Switzerland, www.fag.ch

We propose you to use the following lubrication programme :

Daily - SAE 10 : Some drops of oil to bearings of the ink distribution steèl riders (41); to the oilers on the two sides of the machine.

Weekly - SAE 10 : Some drops of oil to the gripper operating ramp; to the chain drive of the ink drum.

For machines with hand-drive:

Lubrication of the cylinder stop system (43)

For machine with adjustable bed:

Some drops of oil to the oil hole of the nut (44). In order to have access to this nut take off shield (45).
The endless screw for the drive of the reciprocating steel riders must be greased with a non dropping oil, i.e. BP Enegrol NT 300 or with grease containing molybdeuum disulfide.

Yearly - SAE 90 : Check oil level on ink drum motor.
Check also that no joints or seals on the gear motors are losing oil.

Instruction for worm gear drive of motorized presses

1. The worm gear drive is filled at the factory with 0,2 litres of "Mobiloil Compound DD". Before machine is taken into service, please check that the oil level is between the two marks on the oil sight glass. The gear drive contains parts made of bronze, therefore no oil containingadditifs on sulfure - chlore basis should be used. Fill always up with the same or an equivalent oil. Since the oil is quite heavy, it takes a few minutes before the level is established at the sight glass. It is dangerous to fill in more oil than the above mentioned quantity, because the worm gear drive and the motor would heat up too much.

2. The oil plug on top has a 2 mm hole for ventilation. On machines which are disassembled for shipping, this hole is plugged up with a taper pin. Please check that this pin is removed before machine is taken into service.

3. The oil has to be changed after the first 200 hours of running, afterwards once per year.

Digitized & provided by www.proofpress.ch – dk, 2021
Courtesy of FAG Graphic Systems SA, Lausanne, Switzerland, www.fag.ch

List of accessories and tools delivered with the Press as standard equipment

1 Side lay with micrometer adjustment
1 Height gauge
1 Lock-up bar
1 Pitch line bar
1 Spacer
4 Cast iron shoes with rubber shock absorbers
1 Cylinder packing VISCO
1 Ruler in inches
2 Fork wrenches SW 9/11 and SW 20
8 Allen head keys SW 1,5 - 2 - 2,5 - 3 - 4 - 5 - 6 - 12
1 Allen head screw-driver SW 5
1 Oiler
1 Tin of paint

Lausanne, November 14th, 1962

Digitized & provided by www.proofpress.ch – dk, 2021
Courtesy of FAG Graphic Systems SA, Lausanne, Switzerland, www.fag.ch

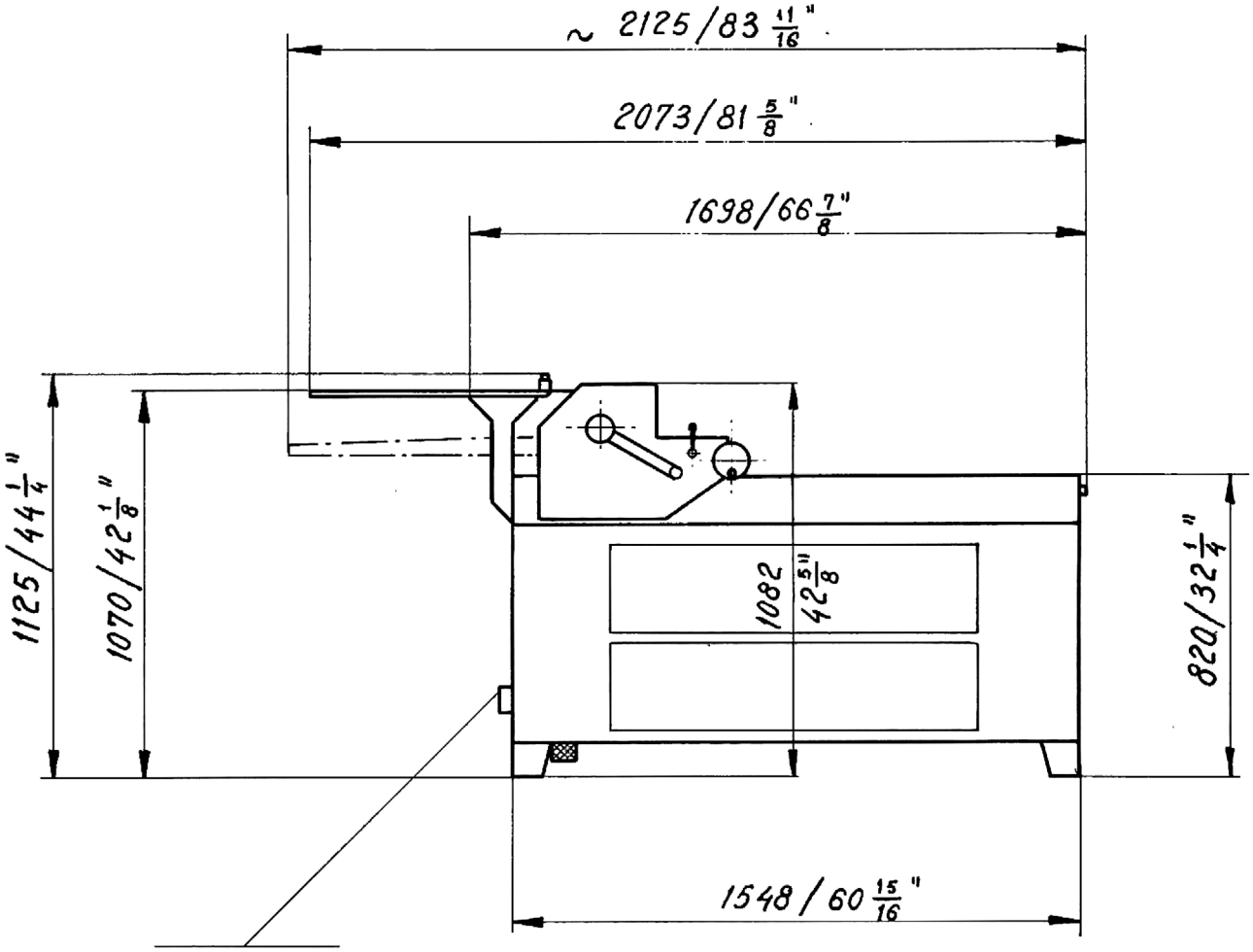

Branchement électrique – Puissance
Elektrischer Anschluss – Leistung
Electrical connection – Power
} 0,15 kW

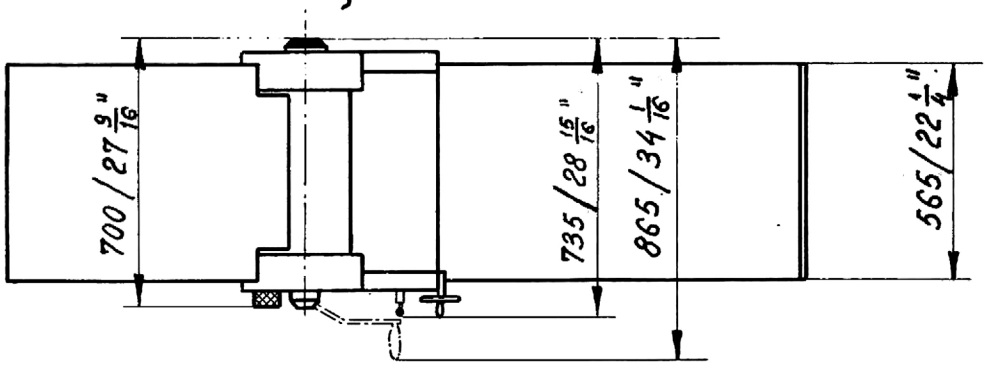

Poids net sans accessoires ~ 420 kg.
Nettogewicht ohne Zubehör ~ 420 kg.
Net weight without accessories ~ 926 Lbs.

SOCIÉTÉ ... LAUSANNE	S-40	Marbre fixe – Entr. à main Festes Fund – Handantrieb Non adj. Bed – Hand driven	Ech. 1:20 3.12.64 Wbl.	043200

Digitized & provided by www.proofpress.ch – dk, 2021
Courtesy of FAG Graphic Systems SA, Lausanne, Switzerland, www.fag.ch

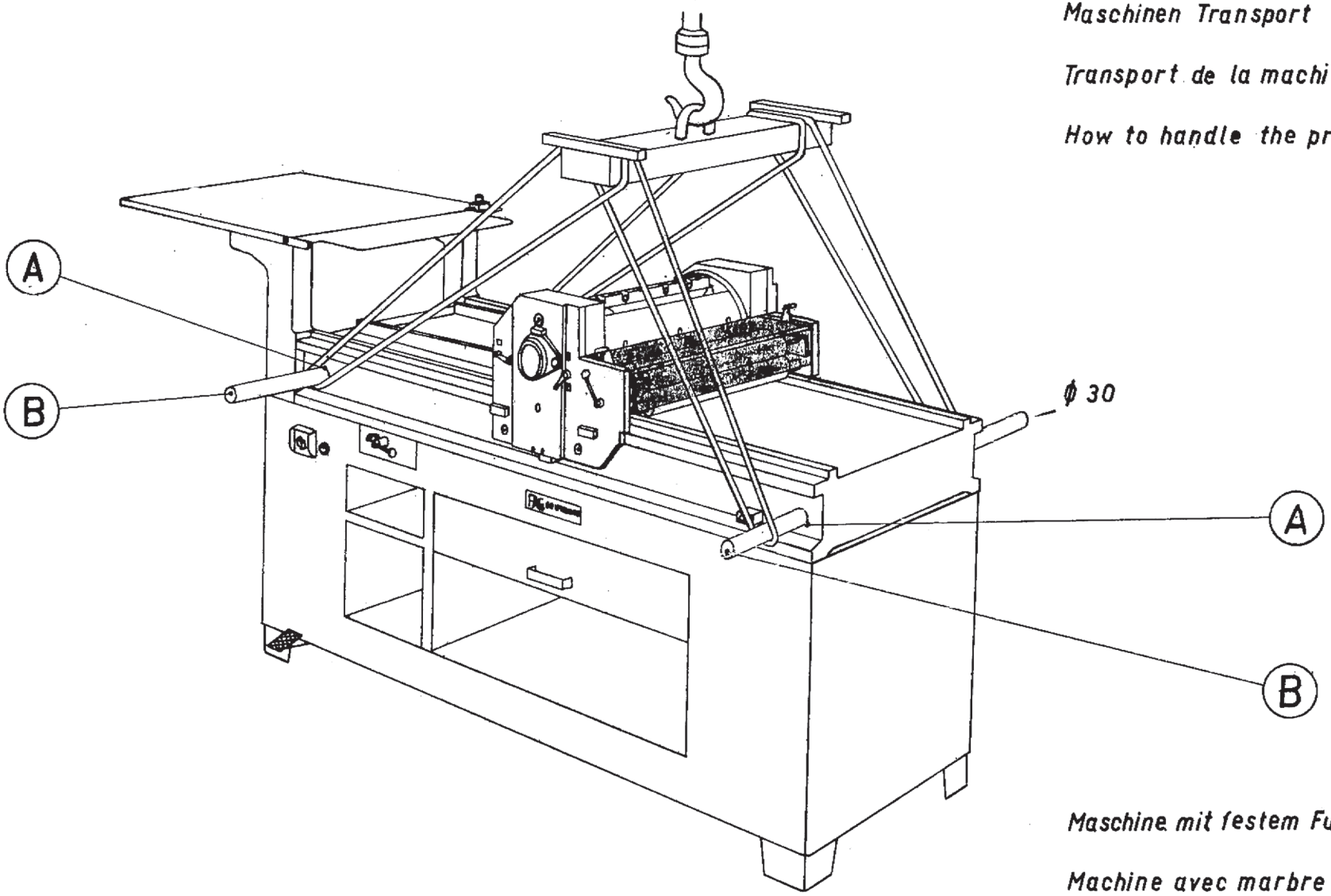

Maschinen Transport

Transport de la machine

How to handle the press

Maschine mit festem Fundament

Machine avec marbre fixe

Machine with fixed bed

Fig. 1

Digitized & provided by www.proofpress.ch – dk, 2021
Courtesy of FAG Graphic Systems SA, Lausanne, Switzerland, www.fag.ch

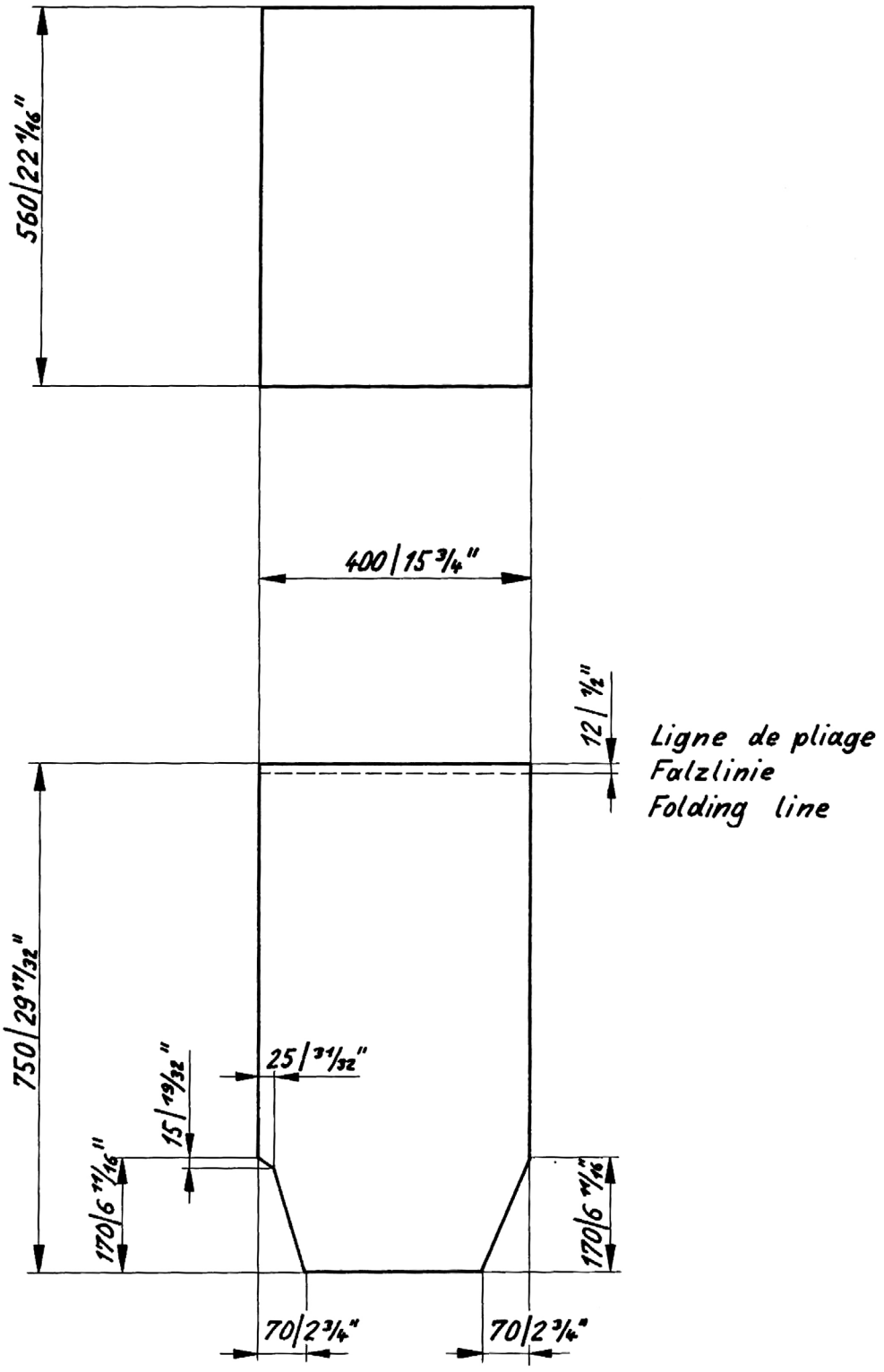

FAG SOCIÉTÉ ANONYME LAUSANNE	CONTROL 485	Habillage du cylindre Zylinderaufzug Cylinder packing	Ech. 1:10 11.6.64Se	Fig. 4

Digitized & provided by www.proofpress.ch – dk, 2021
Courtesy of FAG Graphic Systems SA, Lausanne, Switzerland, www.fag.ch

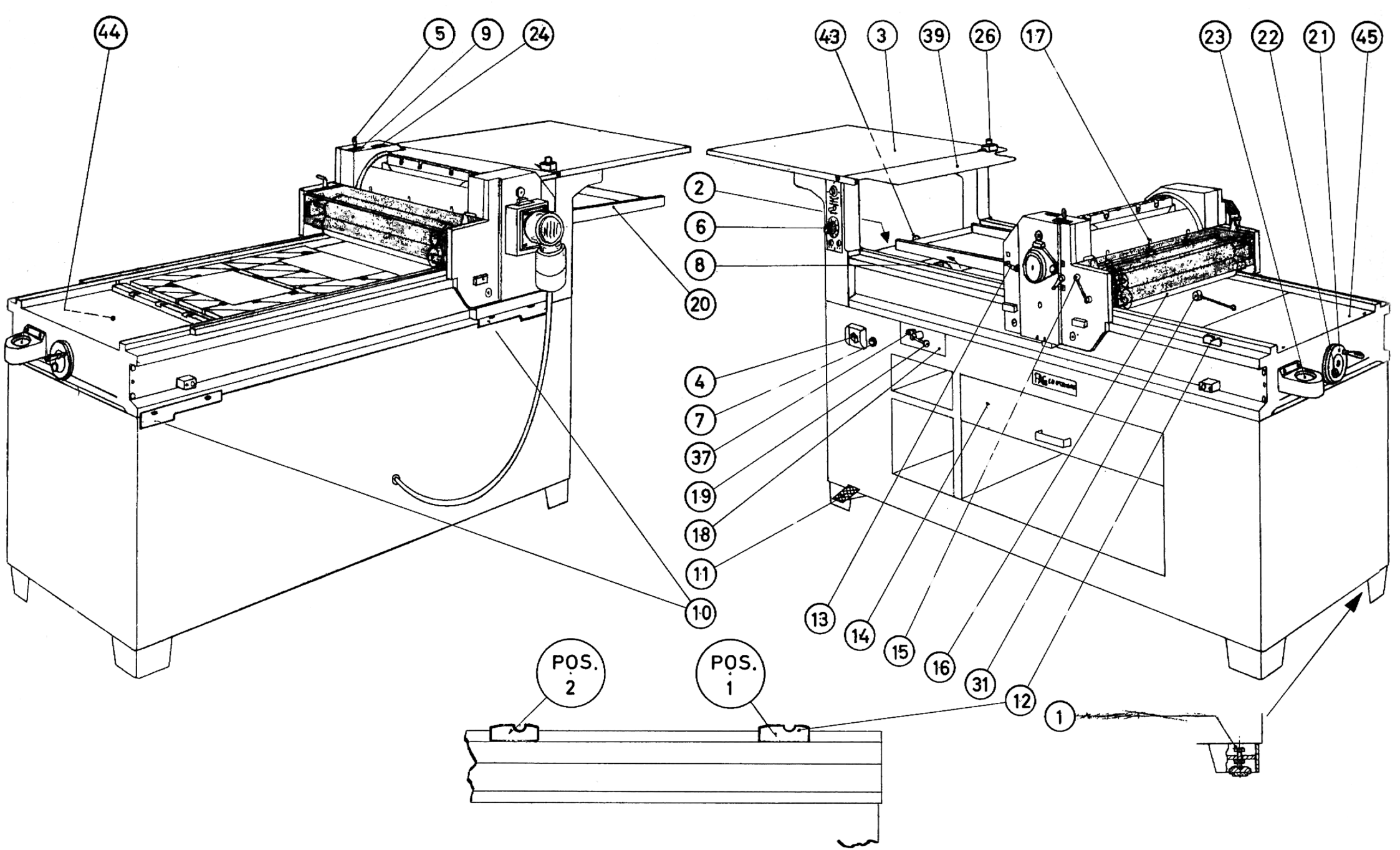

Fig.5

Digitized & provided by www.proofpress.ch – dk, 2021
Courtesy of FAG Graphic Systems SA, Lausanne, Switzerland, www.fag.ch

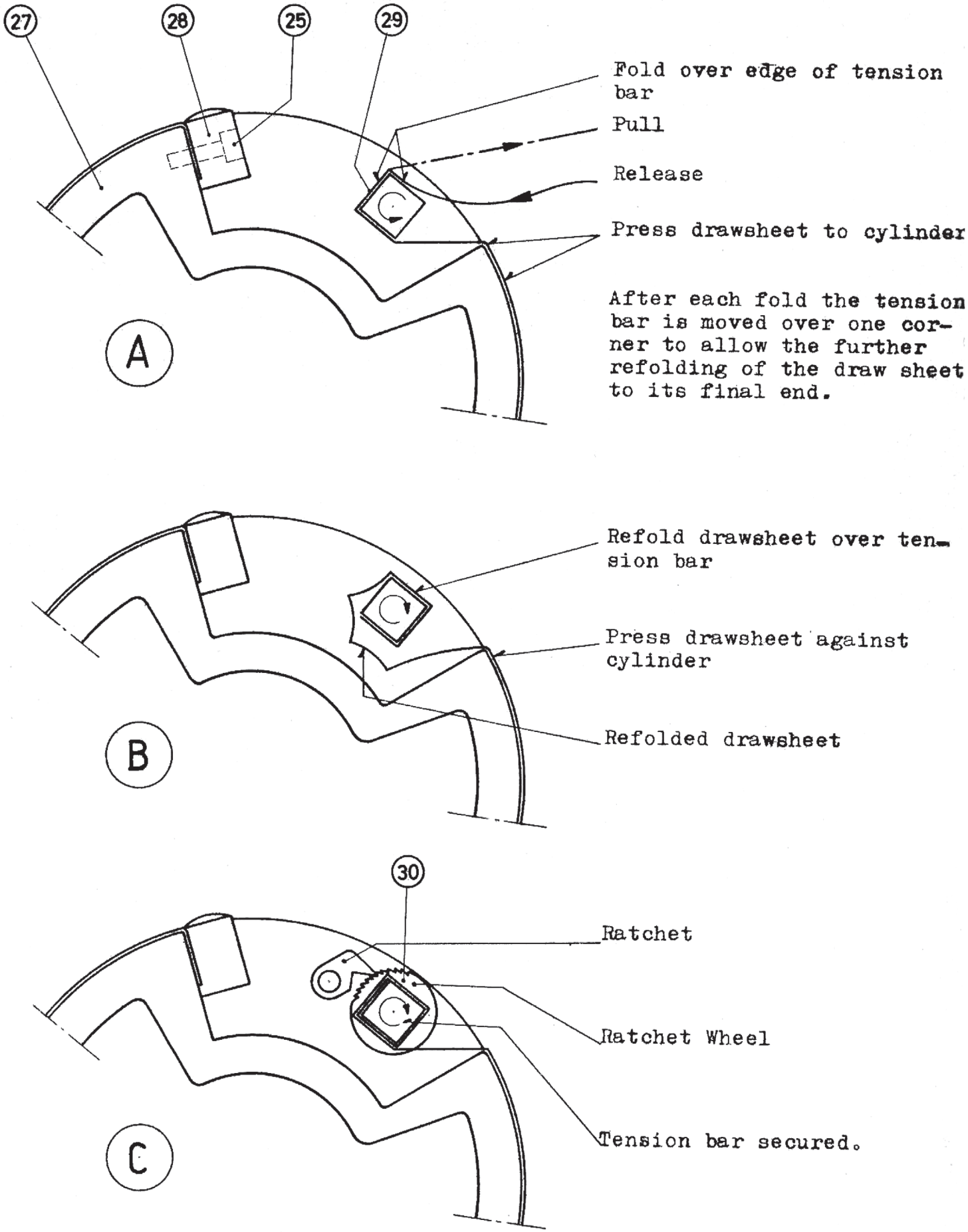

Fig. 6

Digitized & provided by www.proofpress.ch – dk, 2021
Courtesy of FAG Graphic Systems SA, Lausanne, Switzerland, www.fag.ch

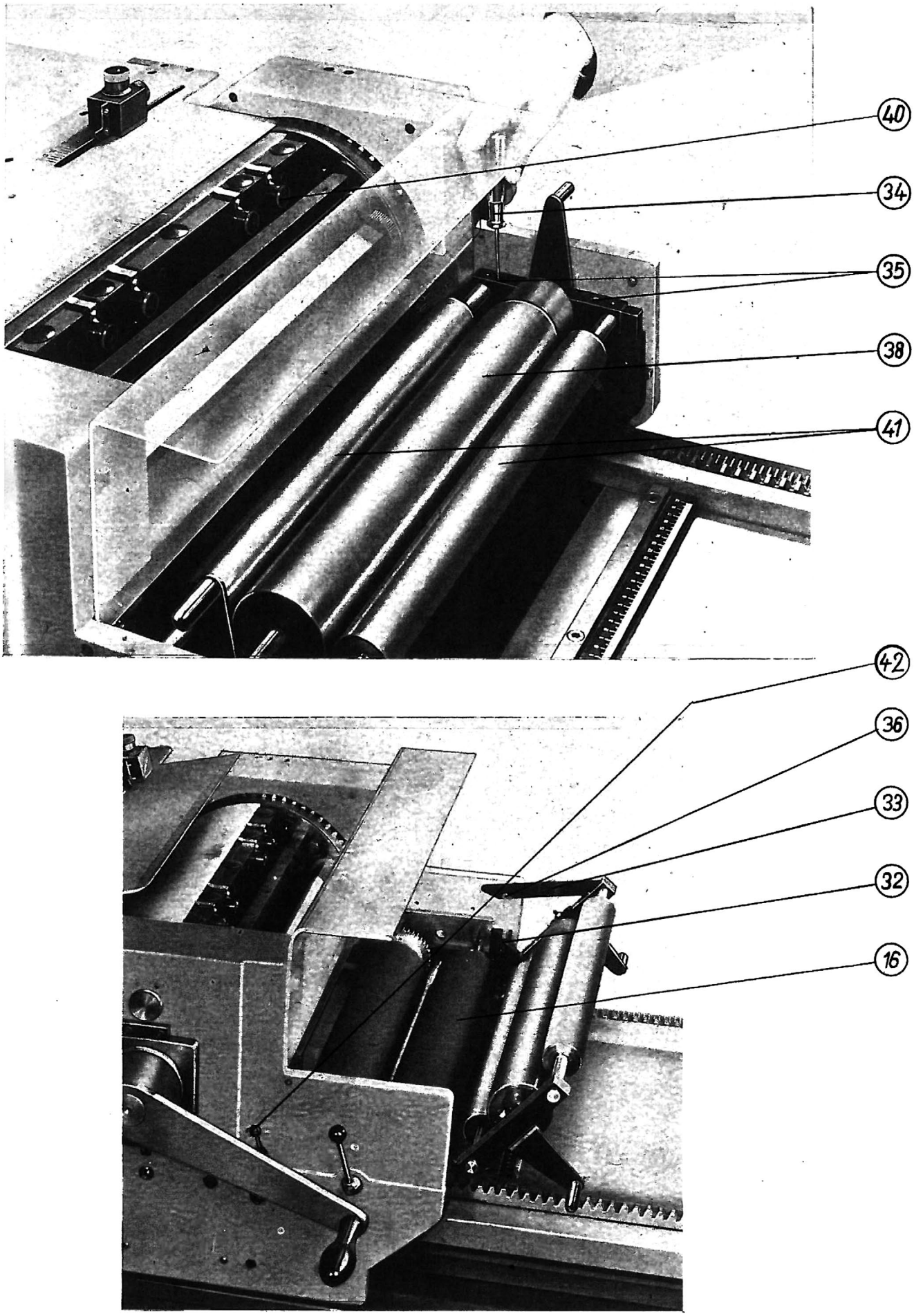

Fig. 7

Digitized & provided by www.proofpress.ch – dk, 2021
Courtesy of FAG Graphic Systems SA, Lausanne, Switzerland, www.fag.ch

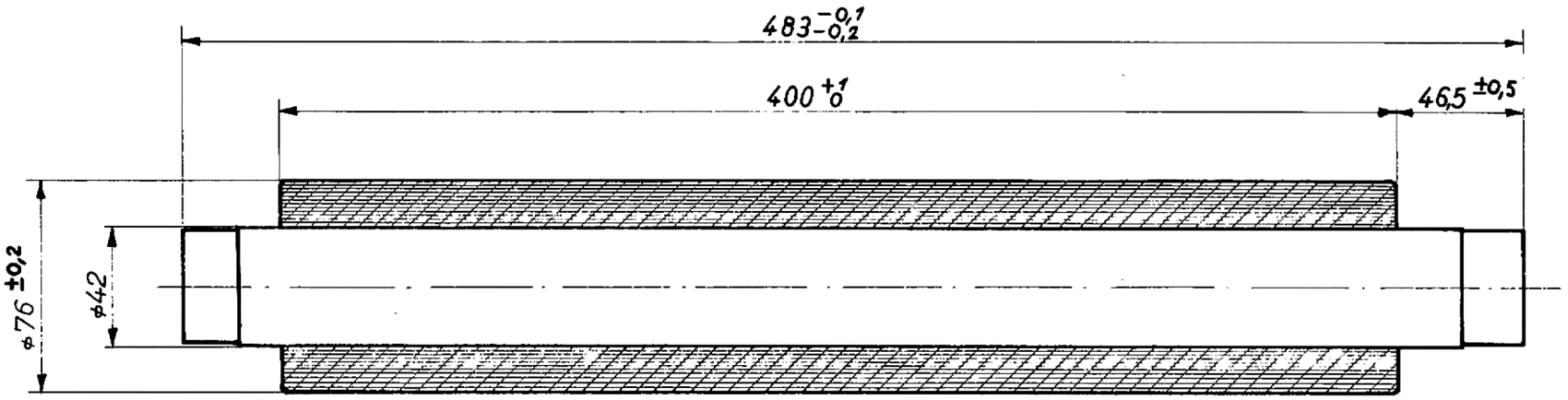

$\pi D = 238,76$

Fig. 9

Digitized & provided by www.proofpress.ch – dk, 2021
Courtesy of FAG Graphic Systems SA, Lausanne, Switzerland, www.fag.ch

FAG

S. A. - LAUSANNE

FOURNITURES ARTS GRAPHIQUES

Inking
Farbwerk
Encrage

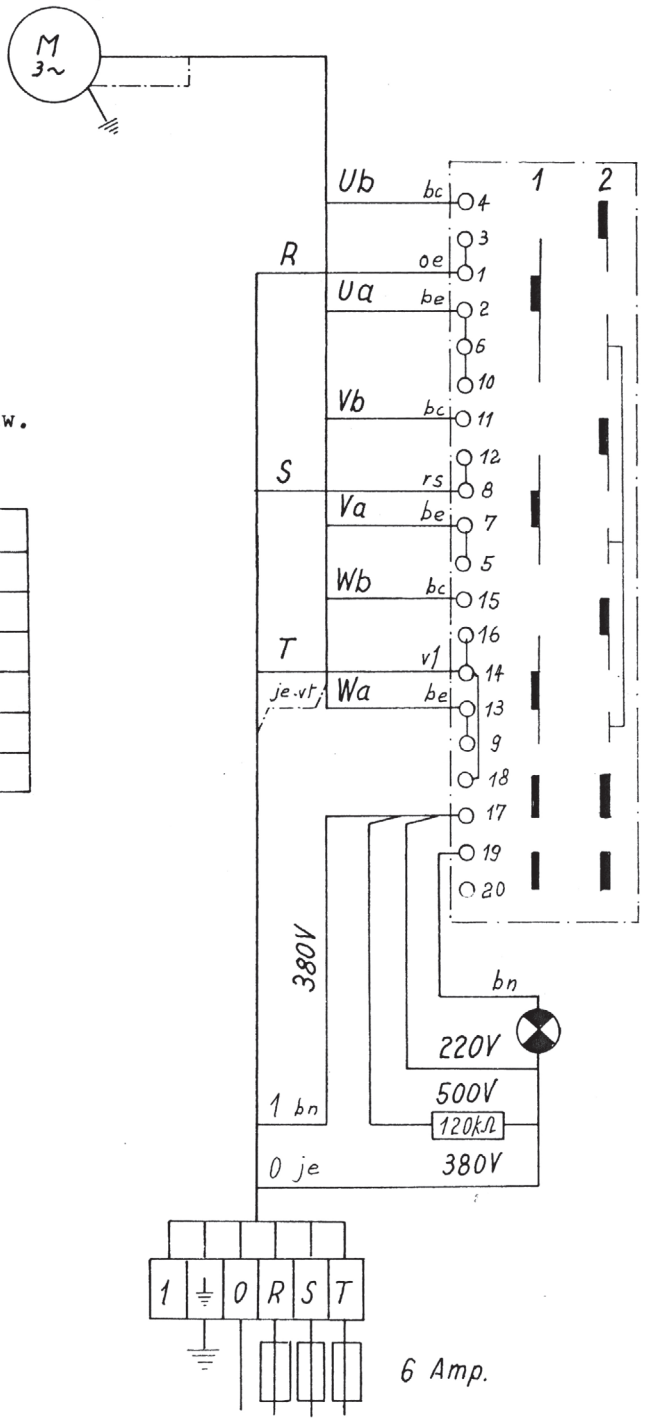

Moteur triphasé 0,2/0,4 Kw.

1500/3000 t/min.

Tension	I Courant II	
220 V.	1,38	1,47
380 V.	0,81	0,85
415 V.	0,73	0,78
500 V.	0,61	0,65

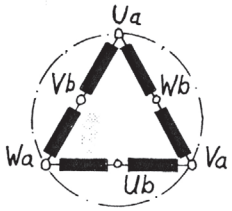

Schéma de principe pour machine à main 02/03/06

3.342

rempl. N.-0342-1 b

Digitized & provided by www.proofpress.ch – dk, 2021

Courtesy of FAG Graphic Systems SA, Lausanne, Switzerland, www.fag.ch